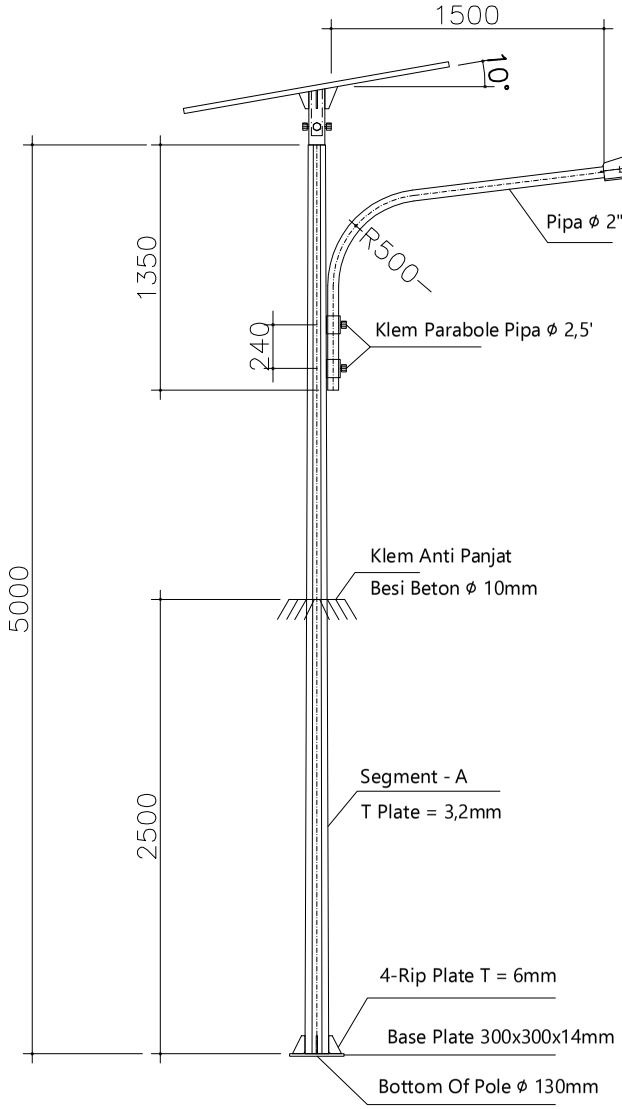

TIANG PJU H-05M SP TYPE SC
SCALE 1 : 100
OCTAGONAL

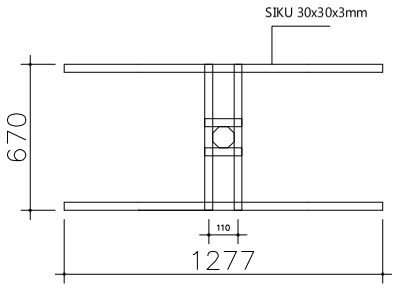

DET 3. BRACKET MODUL SOLAR CELL
SCALE 1 : 25

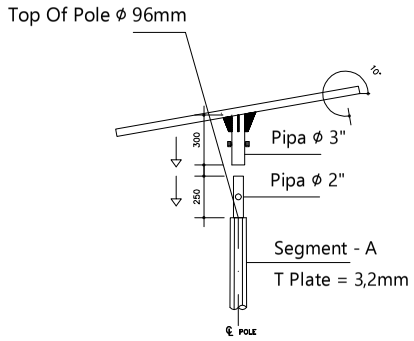

DET 3. BRACKET MODUL SOLAR CELL
SCALE 1 : 25

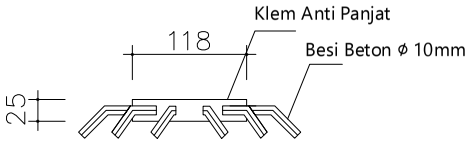

Det 2. Klem Anti Panjat
SCALE 1 : 25

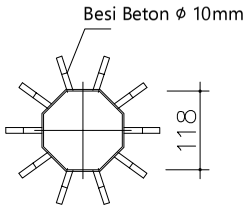

Det 2. Klem Anti Panjat
SCALE 1 : 25

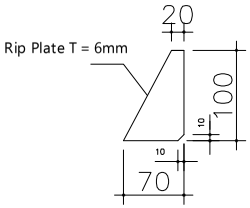

Det. Rip Plate
SCALE 1 : 25

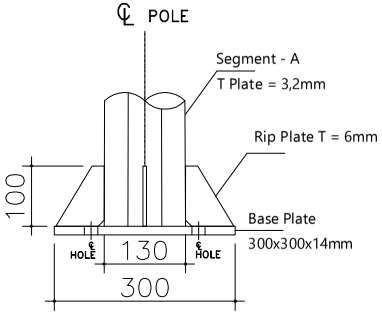

DET. 1 Base Plate
SCALE 1 : 25

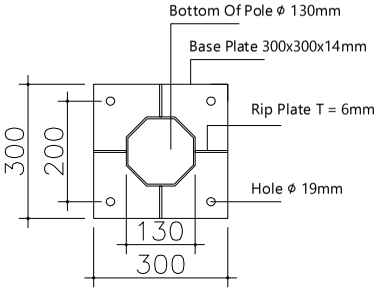

DET. 1 Base Plate
SCALE 1 : 25

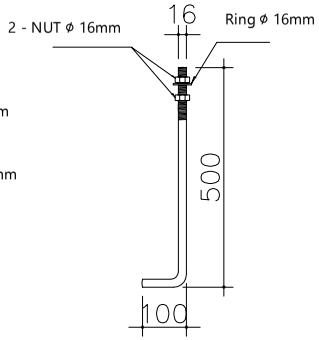

Det. Anchor Bolt
SCALE 1 : 25

KETERANGAN

STANDART MUTU :

- ISO 9001 : 2008
- Plate Baja : ST 41 / SS 400
- Welding : Las Listrik
- Finishing Hot Dip Galvanize
- Segment A = 5000mm
- Top Of Pole ϕ 96mm
- Bottom Of Pole ϕ 130mm
- Base Plate 300x300x14mm
- Anchor Bolt ϕ 16mm

PRODUCTION :

heloRI

PT. HELORI GRAHASARANA

JOB TITLE :

TECHNICAL SPECIFICATION

CLIENT :

QUANTITY :

DRAWING TITLE :

TIANG PJU OCTAGONAL
H–05M SP TYPE SC

DATE	CLIENT APPROVAL	APPROVAL
		Risawan W.
CAD	DESIGN	CHECK
Auto CAD 2010		

DRAWING NO : HELORI-H05-SP-SC

SHEET NO : SHEET 1 Of 1