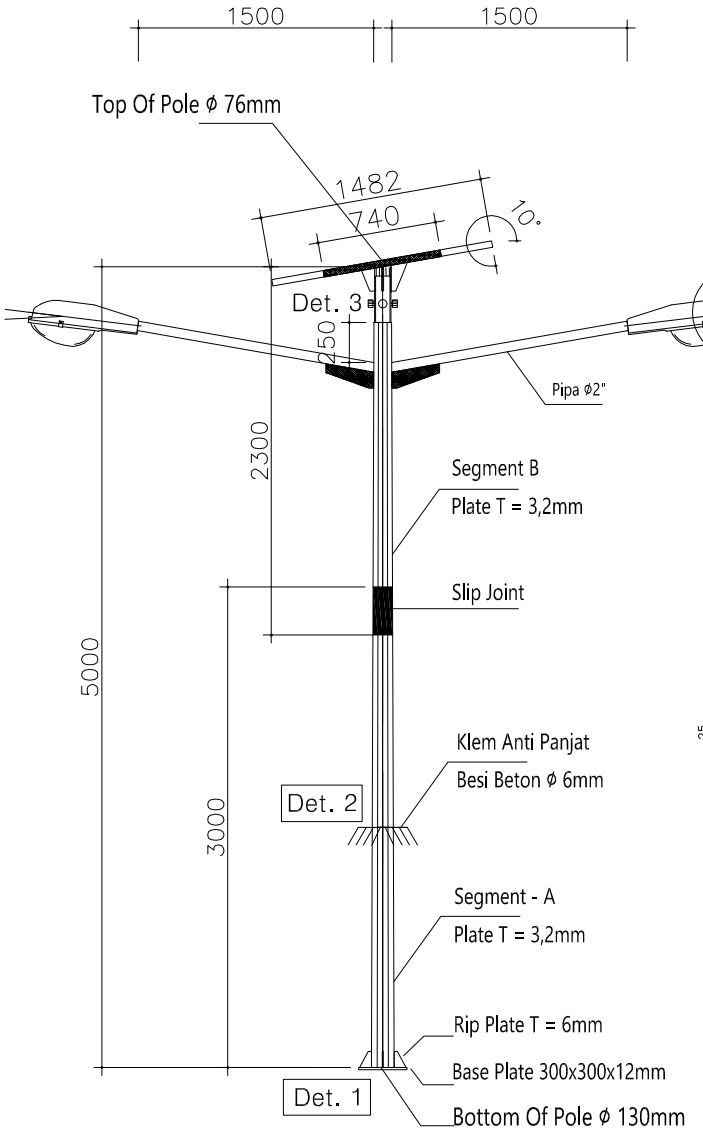

TIANG PJU H-05M ST TYPE DT

SCALE 1 : 100

OCTAGONAL

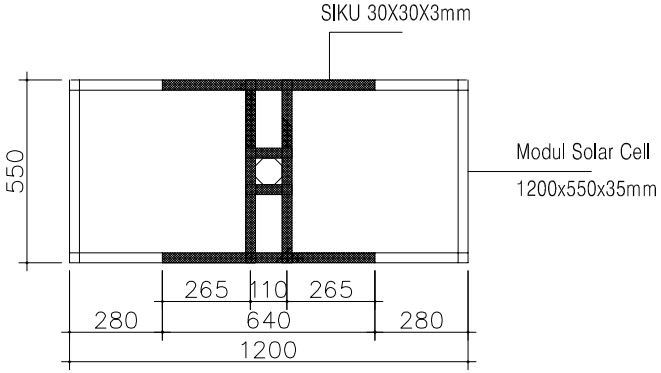

Det 3. Bracket Solar Cell

SCALE 1 : 25

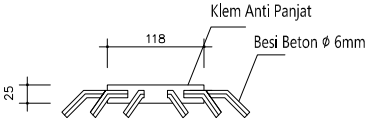

Det 2. Klem Anti Panjat

SCALE 1 : 25

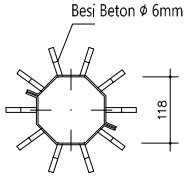

Det 2. Klem Anti Panjat

SCALE 1 : 25

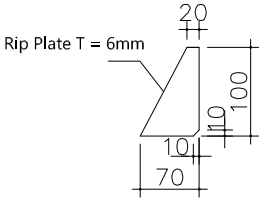

Det. Rip Plate

SCALE 1 : 25

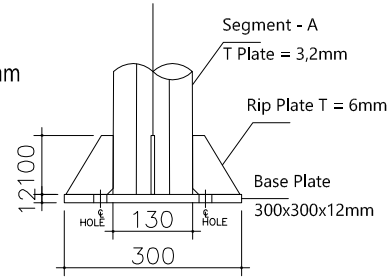

DET. 1 Base Plate

SCALE 1 : 25

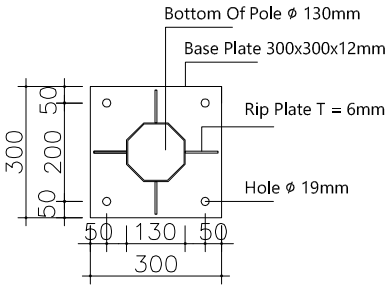

DET. 1 Base Plate

SCALE 1 : 25

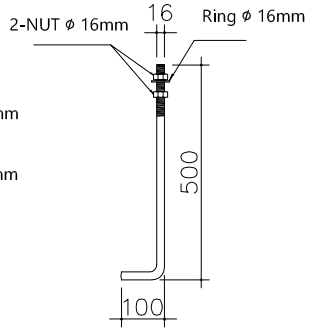

Det. Anchor Bolt

SCALE 1 : 25

KETERANGAN

STANDART MUTU :

- ISO 9001 : 2008
- Plate Baja : ST 41 / SS 400
- Welding : Las Listrik
- Finishing Hot Dip Galvanize
- Segment System Slip Joint
- Segment A = 3000mm
- Segment B = 2300mm
- Bottom Of Pole ϕ 130mm
- Base Plate 300x300x12mm

PRODUCTION :

HeloRI

PT. HELORI GRAHASARANA

JOB TITLE :

TECHNICAL SPECIFICATION

CLIENT :

DRAWING TITLE :

TIANG PJU OCTAGONAL

H-05M DT SC

DATE	CLIENT APPROVAL	APPROVAL
		Risawan. W
CAD	DESIGN	CHECK
Auto CAD 2010		

DRAWING NO : HELORI-H05-ST-SC

SHEET NO : SHEET 1 Of 1